User manual

AH012B
SLIM STROBE BAR

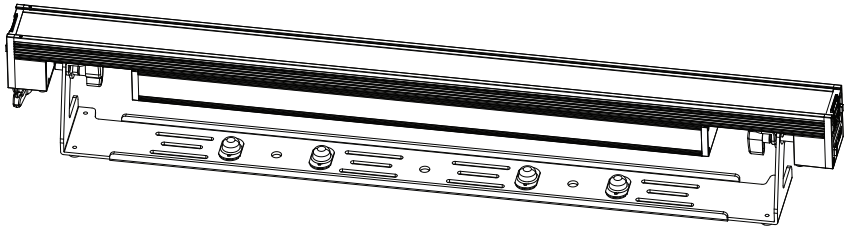

Please read carefully before use

Please Note: Specifications and improvements in the design of this unit and this manual are subject to change without any prior written notice.

Product Overview

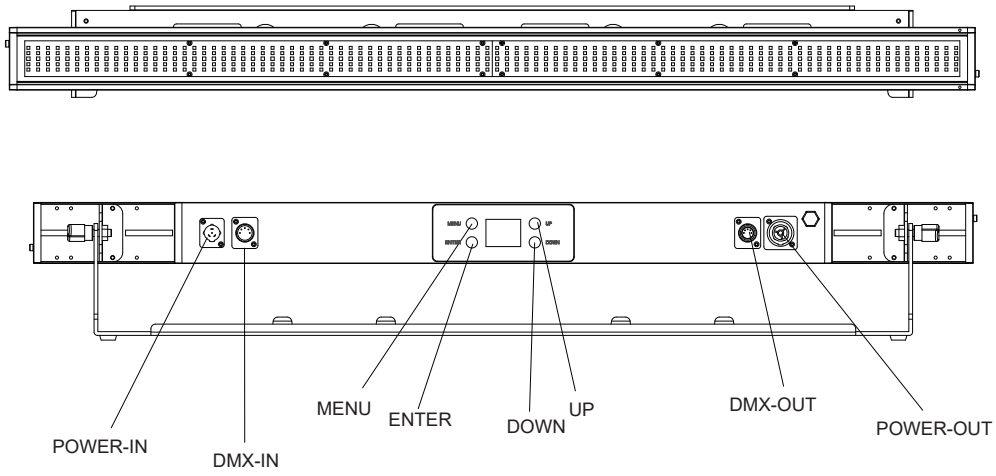

Mechanical Specification

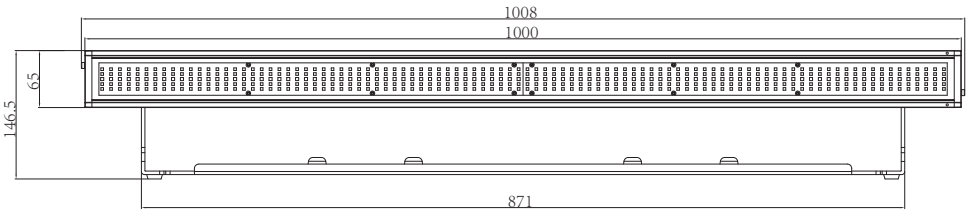

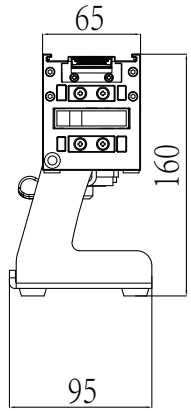

Packaging: Thanks for your purchasing the AH012B. All the lights have been checked and are in excellent operating condition. Please check the shipping carton first. Because there maybe damage occurred during the shipment. Then check the lights carefully and be sure that the light is intact and works normally. In the event damage has been found, spare parts are missing or the lights works abnormally, please contact us for further instructions. And please don't return the light to the dealer before contacting us.

Introduction:The AH012B has four operating modes: DMX mode, Auto mode, Master/Slave and STATIC COLOR. And the light has six DMX channel. DMX channel is including 3 channel, 13 channel, 24 channel, 38 channel, 52 channel and 96 channel. You can see 31 kinds of shows when you open the Auto mode .All then all the lights in Master/Slave mode will run following the one in Auto mode. Using fog or special effect smoke, you can see better showing effect.

Warning!

1. For the sake of preventing the risk of electrical shock or fire.
2.Don't look directly at the opening lights all the time, or it may damage your eyes.

Accessory

① Barndoor x 1 (purchase separate)
② Frost filter x 1(purchase separate)
③ Power cable x 1
④ DMX cable x1(purchase separate)
⑤ User manual x 1
⑥ Fastlock x 2

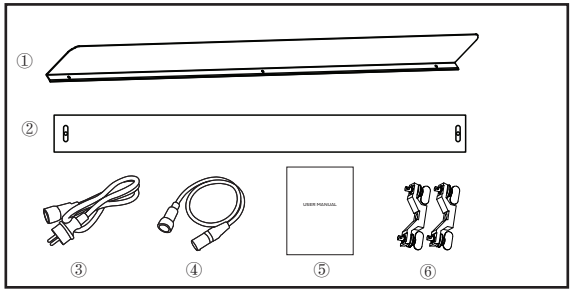

RDM

RDM compliance:ANSI/ESTA E.120

Parameter ID		Command 'Discovery'	Command 'Set'	Command 'Get'
DISC_UNIQUE_BRANCH		√		
DISC_MUTE		√		
DISC_UN_MUTE		√		
DEVICE_INFO				√
SUPPORTED_PARAMETERS				√
SOFTWARE_VERSION_LABEL				√
DMX_START_ADDRESS			√	√
IDENTIFY_DEVICE			√	√
DEVICE_MODEL_DESCRIPTION				√
PARAMETER_DESCRIPTION				√
MANUFACTURER_LABEL				√
DEVICE_LABEL				√
BOOT_SOFTWARE_VERSION_ID				√
BOOT_SOFTWARE_VERSION_LABEL				√
DMX_PERSONALITY			√	√
DMX_PERSONALITY_DESCRIPTION				√
SLOT_INFO				√
SLOT_DESCRIPTION				√
SENSOR_DEFINITION				√
SENSOR_VALUE				√
DEVICE_HOURS				√
LAMP_HOURS				√
RESET_DEVICE	Hot reset-Factory reset		√	
	Cold reset-Restart		√	
CURVE			√	√
DMX STATE			√	√
DIMMER SPEED			√	√
"√"-executable command； "×"-to-be-updated command				

RDM---Remote Device Management

RDM is a wild version of the DMX512-A protocol, allowing dimming stations and other control devices to be discovered through a DMX512 network, and then configuring, status monitoring, and managing intermediate and line end devices.

It allows two-way communication between the lighting device or system controller and the connected RDM compatible device through the standard DMX. This protocol will allow these devices to be configured, monitored, and managed in a manner that does not interfere with the normal operation of standard DMX512 devices that do not recognize the RDM protocol.
Allow a controller or test device to find other devices that can be RDM, such as computer lights or dimming cabinets, and remotely manage them through this connection intelligence. Including the ability to remotely set the initial address of the DMX512, query the device's errors or statistics, and achieve most of the configuration settings that are usually done on the front panel of the device. RDM can run with the new RDM device or any original DMX512 product on the same data link without any performance impact. Since RDM runs on the first team DMX512 link, the only infrastructure upgrade required by RDM is to upgrade the existing data distributor to implement a two-way mode to support RDM.

The RDM information is transmitted through the first pair of DMX512 data channels. RDM uses packets that include non-zero initial codes to start and control communications. This alternating(rotating) session and waiting for indicative responses is performed in a semi-duplex format. The second data pair is not used for any RDM function.

Two-way data transmission-each vendor's equipment can exchange data, Art-net can only transmit data, can not exchange with each other.

Its functions are as followed:

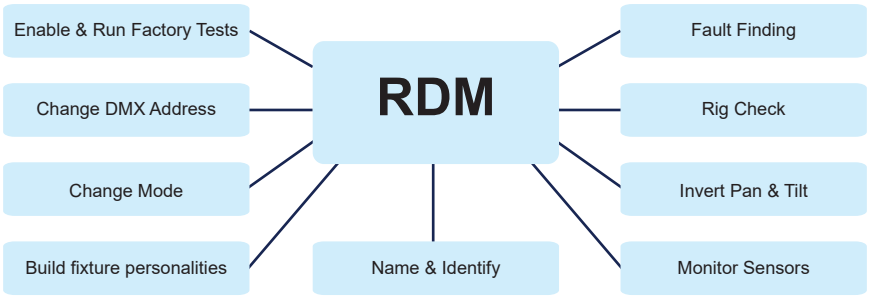

Features

- Light Source: 384*1.5W RGB, 96*5W CW LED
- Beam angel: 90 °
- Power consumption: 162W
- DMX channels: 3,13,24,38,52 & 96 CH
- DMX and RDM is available.
- Power in and out:Seetronic IP65 true 1 power input and output
- DMX in and out:Seetronic IP65 XLR input and output
- Built-in Effect: color mixing, variable color chasing, strobing and fading
- Four button with TFT LED displayer
- Body angel: 0 to 90°
- Temperature protection
- Aluminium body and die-cast cover.Anti UV and salt coat painting.
- Waterproof: IP65
- Product dimension: 1008mm(L)* 94.5mm(W)* 160.4mm(H)
- NW:5.55KG

Displayer introduction

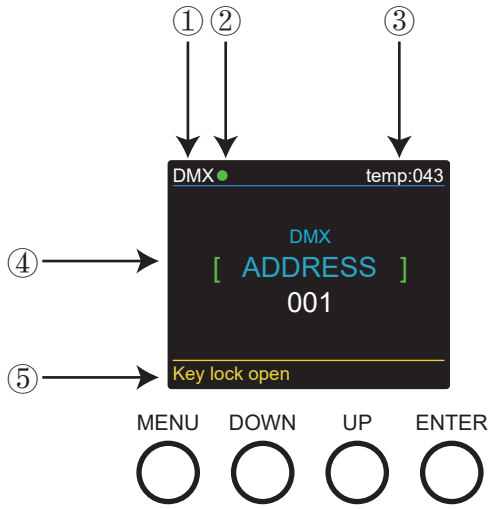

1. DMX means the light is in the DMX mode.Similarly,SLAVE means the light is in the SLAVE mode.

2. The color of the point shows the condition of signal transmission. Green represents the good condition, while red represents the signal is interrupted.

3. The item shows the working temperature of the light.When the working temperature exceeds the max temperature,the color of the letters and number will change from white to yellow.

4. This item shows the menu you selected.

5. This item shows the condition of key lock. “Key lock open” means the key lock is open.And “Key lock off” means the key lock is close.

CABLE CONNECTORS

Cabling must have a male XLR connector on one end and a female XLR connector on the other end.

DMX connector configuration

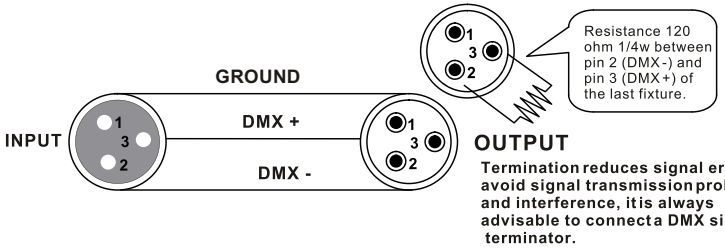

caution:Do not allow contact between the ground and the fixture’s chassis ground. Grounding the ground can cause a ground loop, and your fixture may perform erratically. Test cables with an ohm meter to verify positive pole and to make sure the pins are not grounded or shorted to the shield or each other.

3-PIN TO 5-PIN CONVERSION CHART

Note! If you use a controller with a 5 pin DMX output connector, you need to use a 5 pin to 3 pin adapter. The chart below details a proper cable conversion:

3-PIN TO 5-PIN CONVERSION CHART

Conductor	3 Pin Female (output)	5 Pin Male (Input)
Ground/Shield	Pin 1	Pin 1
Data (-) signal	Pin 2	Pin 2
Data (+) signal	Pin 3	Pin 3
Do not use		Do not use
Do not use		Do not use

Mounting

When installing the unit, the trussing or area of installation must be able to hold 10 times the weight without any deformation. When installing the unit must be secured with a secondary safety attach-ment, e.g. and appropriate safety cable. Never stand directly below the unit when mounting, removing, or servicing the unit.

Overhead mounting requires extensive experience, including calculat-ing working load limits, installation material being used, and perodic safety inspection of all installation material and unit. If you lack these qualifcations, do not attempt the installation yourself.

The installaiton should be checked by a skilled person once a year.

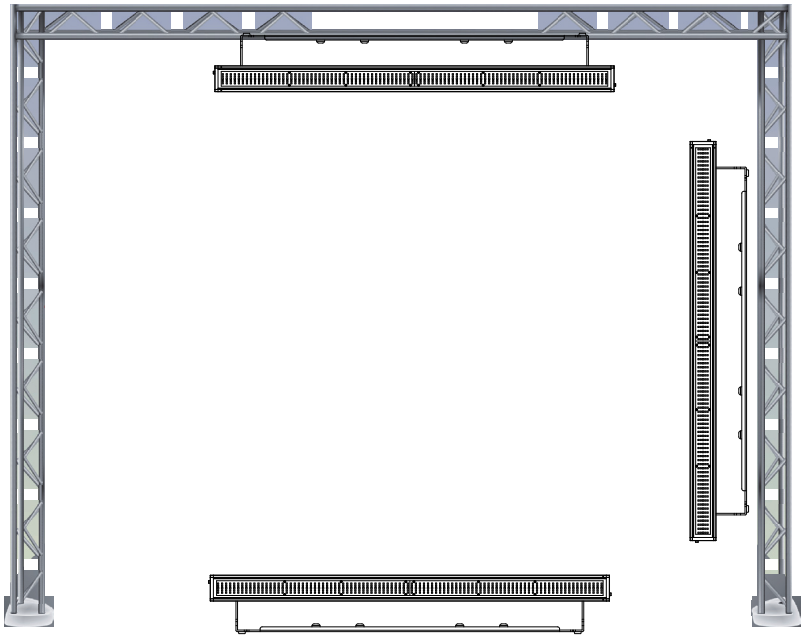

The AH012B is fully operational in three different mounting positions, hanging upside-down from a ceiling, set on a flat level surface or mount the unit on its side. Be sure this fxture is kept at least 0.5m away from any flammable materials (decoration etc.). And you'd better use and install the supplied safety cable as a safety measure to prevent accidental damage and/or injury in the event the clamp fails (see next page).

Programme Menu

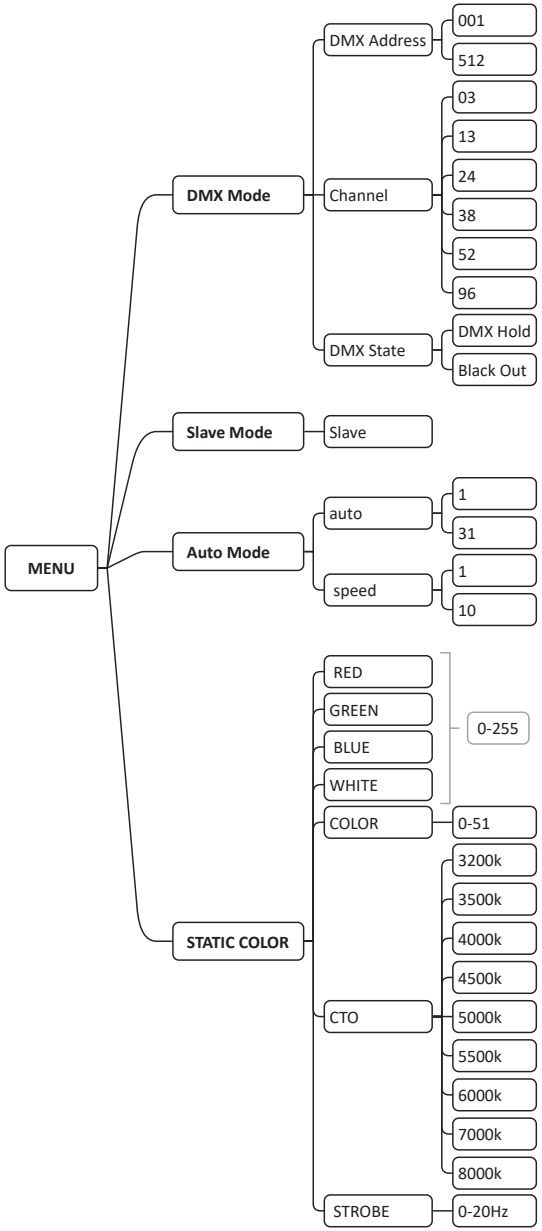

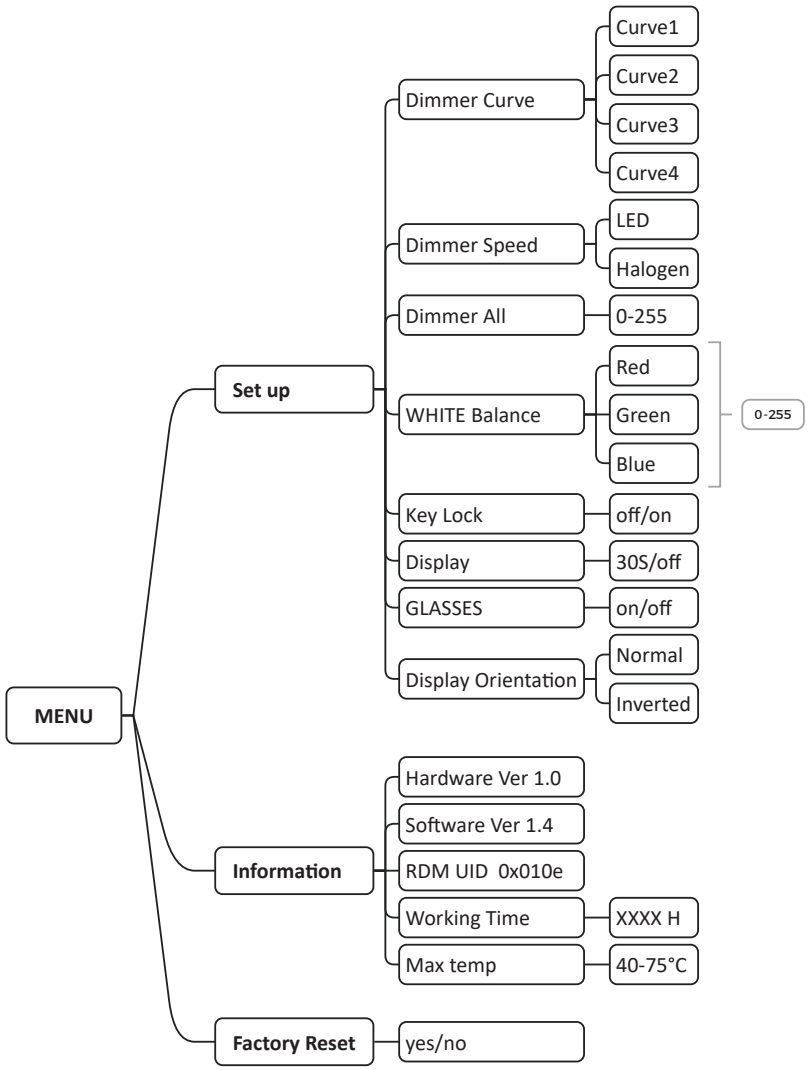

Update software via DMX cable

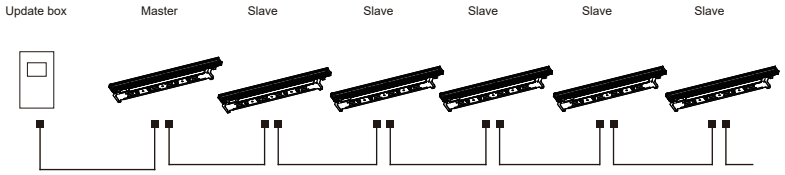

First,set the first one light in Master mode,the other lights in Slave mode,then connect with DMX cable.

Second,connect the power for updater box,and choose the software,then the updater box connect with the first one light(Master),the background will be shows grey color.

Third,press the ENTER button,and the display shows “ wait”,a few seconds, shows ”loading” and change to other color,It means uploading, a few minutes, upload success will be shows.All the programs edited in the Master light will be uploaded to the Slave lights.

frost filter glass will show the frost filter effect. When you select off, the frost filter effect will be turned off.
8)Display Orientation- In this item, you can choose normal or inverted. In normal mode, the display does not change. In inverted mode, the display content is reversed.

INFORMATION-In this menu,you can learn about the information of software, hardware,RDM,run time and the max temp of the light.
1.Press "ENTER" button and then UP or DOWN button until "INFORMATION" is showed.
2.Press "ENTER" button, and "Software", "Hardware","RDM","Run Time" or "Max Temp" will be showed. Then press ENTER, and you can see five items as below:
1)Hardware ver-This item displays the Hardware information.
2)Software Ver- This item displays the Software information.
3)RDM: UID -This item displays the RDM Version.
4)Working Time:-This item displays the Run Time of light.
5)Max Temp: - You can set the your desired Max working temperature about the light in this menu. When the working temperature of the light exceeds the Max temperature, the color of letter"Temp xx" showed in the menu will change from white to yellow. Meanwhile, the light will adjust the working temperature automatically.

FACTORY RESET-In this menu, you can reset all the value of the system.
1.Press "ENTER" and then press "UP" or "DOWN" to "FACTORY RESET".
2. Press "ENTER" to reset all the values of the system.

DMX control mode

3 CHANNELS		
Channel	Value	Function
1	000 - 255	Flash intensity
2	000 - 255	Flash Duration
3	000 - 255	Flash Rate

13 CHANNELS		
Channel	Value	Function
1	000 - 255	Master Dimmer
2	000 - 255	Dimmer fine
3	000 - 255	Flash intensity
4	000 - 255	Flash Duration
5	000 - 255	Flash Rate
6	000 - 255	Color marco 0-51
7	000 - 255	CTO
8	000 - 255	Frost Glasses
9	000 - 255	Red
10	000 - 255	Green
11	000 - 255	Blue
12	000 - 255	dimmer speed
13	0 - 69	dimmer curve1
	70 - 139	dimmer curve2
	140 - 209	dimmer curve3
	210 - 255	dimmer curve4

24 CHANNELS		
Channel	Value	Function
1	000 - 255	Master Dimmer
2	000 - 255	Dimmer fine
3	000 - 255	Flash intensity
4	000 - 255	Flash Duration
5	000 - 255	Flash Rate
6	000 - 255	Color marco 0-51
7	000 - 255	CTO
8	000 - 255	Frost Glasses
9	000 - 255	Red 1-6
10	000 - 255	Green1-6
11	000 - 255	Blue1-6
12	000 - 255	Red 7-12
13	000 - 255	Green7-12
14	000 - 255	Blue7-12
15	000 - 255	White section 1-6
16	000 - 255	White section 7-12
17	000 - 255	Red 13-18
18	000 - 255	Green13-18
19	000 - 255	Blue13-18
20	000 - 255	Red 19-24
21	000 - 255	Green19-24
22	000 - 255	Blue19-24
23	000 - 255	auto 1-31
24	000 - 255	auto speed

38 CHANNELS		
Channel	Value	Function
1	000 - 255	Master Dimmer
2	000 - 255	Dimmer fine
3	000 - 255	Flash intensity
4	000 - 255	Flash Duration
5	000 - 255	Flash Rate
6	000 - 255	Color marco 0-51

DMX MODE-In this menu,you can connect several pieces of lights with DMX cable and control them with the control console. Press "ENTER" and then press "UP" or "DOWN" to "Address" or "DMX Channel" and press "ENTER".
1) "XXX" will be showed in "Address", "XXX" means the Address 001-512. You can press "UP" or "DOWN"to select the address you desired.
1) "Channel [xx]" will be showed in "DMX Channels", "XX" means 6 kinds of DMX Channels Modes. l You can press "UP" or "DOWN" to select the Channel Mode you desired.
2)DMX STATE-In this menu,you can choose the DMX signal you desired. "BLACKOUT" means cut off the DMX signal and "DMX HOLD" means connect DMX signal.

DMX STATE-In this menu,you can choose the DMX signal you desired.
1.Press “ENTER” and then press “UP” or “DOWN” to “DMX STATE”.
2.Press ”ENTER” and you can choose “BLACKOUT” or “DMX HOLD”; ”BLACKOUT” means cut off the DMX signal and “DMX HOLD” means connect DMX signal.

SLAVE MODE-In this menu, you can choose one lighr as the MASTER light and other lights in SLAVE MODE will run follow the MASTER light.
1.Press “ENTER” and then press “UP” or “DOWN” to “SLAVE Mode”.
2. Press “ENTER” and “SLAVE” will be showed, then press “ENTER” to choose.

AUTO MODE-In this menu, you can choose your desired AUTO Mode and adjust the running speed.
1.Press "ENTER" and then press "UP" or "DOWN" to "AUTO MODE".
2.Press "ENTER" you can see 2 items as below:
1) SPEED - It provides "01-10" for you choose.
2) AUTO MODE - It provides “AUTO 1-AUTO 31” for you choose.

STATIC COLOR-In this menu, you can adjust the value of static color and strobe speed as you like.
1. Press "ENTER" button and then UP or DOWN button until "STATIC COLOR" is showed.
2.Press "ENTER" button, and there will be five options. Then, press ENTER to select the option and press UP or DOWN button to select the value you desire as follow:
1)RED-You can adjust the red brightness in this menu.
2)GREEN- You can adjust the green brightness in this menu.
3)BLUE-You can adjust the blue brightness in this menu
4)White -You can adjust the white brightness in this menu.
5)COLOR-You can select 51 static color in this menu.
6)STROBE-You can adjust the strobe speed in this menu.
7)CTO-You can adjust the color temperture in this menu.

SET UP-In this menu, you can adjust the values of the function.
1.Press "ENTER" and then press "UP" or "DOWN" to "SET UP".
2.Press "ENTER" and there has 8 options then press "ENTER" to choose the options and press "UP" or "DOWN" to choose the value you desired as below:
1)Dimmer Curve- In this item, You can choose the dimming curve mode you want.
2)Dimmer Speed-In this item,You can choose the dimming speed mode you want.
3)Dimmer ALL-You can adjust the brightness of color in this menu.
4)White Balance- You can adjust the brightness of each color in this menu.
5)Key Lock -You can choose"ON"or "OFF"to make the Key Lock turn on or off.
6)Display - You can choose the mode of 30S or OFF. The display will be set to turn off after 30S when you select the 30S mode. The display will be steady on and does not turn off when you select the Off mode.
7)Glasses - In this item,You can choose "on" or "off", when you open, at this time, the electronic

Auto					
8	15	auto1	136	143	auto17
16	23	auto2	144	151	auto18
24	31	auto3	152	159	auto19
32	39	auto4	160	167	auto20
40	47	auto5	168	175	auto21
48	55	auto6	176	183	auto22
56	63	auto7	184	191	auto23
64	71	auto8	192	199	auto24
72	79	auto9	200	207	auto25
80	87	auto10	208	215	auto26
88	95	auto11	216	223	auto27
96	103	auto12	224	231	auto28
104	111	auto13	232	239	auto29
112	119	auto14	240	247	auto30
120	127	auto15	248	255	auto31
128	135	auto16			

7	000 - 255	CTO
8	000 - 255	Frost Glasses
9	000 - 255	Red 1-3
10	000 - 255	Green1-3
11	000 - 255	Blue1-3
12	000 - 255	Red 4-6
13	000 - 255	Green4-6
14	000 - 255	Blue4-6
15	000 - 255	Red 7-9
16	000 - 255	Green7-9
17	000 - 255	Blue7-9
18	000 - 255	Red 10-12
19	000 - 255	Green10-12
20	000 - 255	Blue10-12
21	000 - 255	White section 1-3
22	000 - 255	White section 4-6
23	000 - 255	White section 7-9
24	000 - 255	White section 10-12
25	000 - 255	Red 13-15
26	000 - 255	Green13-15
27	000 - 255	Blue13-15
28	000 - 255	Red 16-18
29	000 - 255	Green16-18
30	000 - 255	Blue16-18
31	000 - 255	Red 19-21
32	000 - 255	Green19-21
33	000 - 255	Blue19-21
34	000 - 255	Red 22-24
35	000 - 255	Green22-24
36	000 - 255	Blue22-24
37	000 - 255	auto 1-31
38	000 - 255	auto speed

52 CHANNELS		
Channel	Value	Function
1	000 - 255	Master Dimmer
2	000 - 255	Dimmer fine
3	000 - 255	Flash intensity
4	000 - 255	Flash Duration
5	000 - 255	Flash Rate
6	000 - 255	Color marco 0-51
7	000 - 255	CTO
8	000 - 255	Frost Glasses
9	000 - 255	Red 1-2
10	000 - 255	Green1-2
11	000 - 255	Blue1-2
12	000 - 255	Red 3-4
13	000 - 255	Green3-4
14	000 - 255	Blue3-4
15	000 - 255	Red 5-6
16	000 - 255	Green5-6
17	000 - 255	Blue5-6
18	000 - 255	Red 5-6
19	000 - 255	Green7-8
20	000 - 255	Blue7-8
21	000 - 255	Red 9-10
22	000 - 255	Green9-10
23	000 - 255	Blue9-10
24	000 - 255	Red 11-12
25	000 - 255	Green11-12
26	000 - 255	Blue11-12
27	000 - 255	White section 1-2
28	000 - 255	White section 3-4
29	000 - 255	White section5-6
30	000 - 255	White section 7-8
31	000 - 255	White section 9-10
32	000 - 255	White section 11-12
33	000 - 255	Red 13-14
34	000 - 255	Green13-14
35	000 - 255	Blue13-14

COLOR					
5	9	color1	135	139	color27
10	14	color2	140	144	color28
15	19	color3	145	149	color29
20	24	color4	150	154	color30
25	29	color5	155	159	color31
30	34	color6	160	164	color32
35	39	color7	165	169	color33
40	44	color8	170	174	color34
45	49	color9	175	179	color35
50	54	color10	180	184	color36
55	59	color11	185	189	color37
60	64	color12	190	194	color38
65	69	color13	195	199	color39
70	74	color14	200	204	color40
75	79	color15	205	209	color41
80	84	color16	210	214	color42
85	89	color17	215	219	color43
90	94	color18	220	224	color44
95	99	color19	225	229	color45
100	104	color20	230	234	color46
105	109	color21	235	239	color47
110	114	color22	240	244	color48
115	119	color23	245	249	color49
120	124	color24	250	254	color50
125	129	color25	255		color51
130	134	color26			

88	000 - 255	Green23
89	000 - 255	Blue23
90	000 - 255	Red 24
91	000 - 255	Green24
92	000 - 255	Blue24
93	000 - 255	auto 1-31
94	000 - 255	auto speed
95	000 - 255	dimmer speed
96	0 - 69	dimmer curve1
	70 - 139	dimmer curve2
	140 - 209	dimmer curve3
	210 - 255	dimmer curve4

DMX Sheet

CTO		
5	35	3200K
36	66	3500K
67	97	4000K
98	128	4500K
129	159	5000K
160	190	5500K
191	221	6000K
222	252	7000K
253	255	8000K

dimmer speed		
0	127	LED
128	255	Halogen

36	000 - 255	Red 15-16
37	000 - 255	Green15-16
38	000 - 255	Blue15-16
39	000 - 255	Red 17-18
40	000 - 255	Green17-18
41	000 - 255	Blue17-18
42	000 - 255	Red 19-20
43	000 - 255	Green19-20
44	000 - 255	Blue19-20
45	000 - 255	Red 21-22
46	000 - 255	Green21-22
47	000 - 255	Blue21-22
48	000 - 255	Red 23-24
49	000 - 255	Green23-24
50	000 - 255	Blue23-24
51	000 - 255	auto 1-31
52	000 - 255	auto speed

96 CHANNELS		
Channel	Value	Function
1	000 - 255	Master Dimmer
2	000 - 255	Dimmer fine
3	000 - 255	Flash intensity
4	000 - 255	Flash Duration
5	000 - 255	Flash Rate
6	000 - 255	Color marco 0-51
7	000 - 255	CTO
8	000 - 255	Frost Glasses
9	000 - 255	Red 1
10	000 - 255	Green1
11	000 - 255	Blue1
12	000 - 255	Red 2
13	000 - 255	Green2
14	000 - 255	Blue2
15	000 - 255	Red 3

16	000 - 255	Green3
17	000 - 255	Blue3
18	000 - 255	Red 4
19	000 - 255	Green4
20	000 - 255	Blue4
21	000 - 255	Red 5
22	000 - 255	Green5
23	000 - 255	Blue5
24	000 - 255	Red 6
25	000 - 255	Green6
26	000 - 255	Blue6
27	000 - 255	Red 7
28	000 - 255	Green7
29	000 - 255	Blue7
30	000 - 255	Red 8
31	000 - 255	Green8
32	000 - 255	Blue8
33	000 - 255	Red 9
34	000 - 255	Green9
35	000 - 255	Blue9
36	000 - 255	Red 10
37	000 - 255	Green10
38	000 - 255	Blue10
39	000 - 255	Red 11
40	000 - 255	Green11
41	000 - 255	Blue11
42	000 - 255	Red 12
43	000 - 255	Green12
44	000 - 255	Blue12
45	000 - 255	White section 1
46	000 - 255	White section 2
47	000 - 255	White section3
48	000 - 255	White section 4
49	000 - 255	White section 5
50	000 - 255	White section 6
51	000 - 255	White section 7

52	000 - 255	White section 8
53	000 - 255	White section9
54	000 - 255	White section 10
55	000 - 255	White section 11
56	000 - 255	White section 12
57	000 - 255	Red13
58	000 - 255	Green13
59	000 - 255	Blue13
60	000 - 255	Red 14
61	000 - 255	Green14
62	000 - 255	Blue14
63	000 - 255	Red 15
64	000 - 255	Green15
65	000 - 255	Blue15
66	000 - 255	Red 16
67	000 - 255	Green16
68	000 - 255	Blue16
69	000 - 255	Red 17
70	000 - 255	Green17
71	000 - 255	Blue17
72	000 - 255	Red 18
73	000 - 255	Green18
74	000 - 255	Blue18
75	000 - 255	Red 19
76	000 - 255	Green19
77	000 - 255	Blue19
78	000 - 255	Red 20
79	000 - 255	Green20
80	000 - 255	Blue20
81	000 - 255	Red 21
82	000 - 255	Green21
83	000 - 255	Blue21
84	000 - 255	Red 22
85	000 - 255	Green22
86	000 - 255	Blue22
87	000 - 255	Red 23